4. 14-pin SSOP

Unit:mm

PACKAGE DIMENSIONS

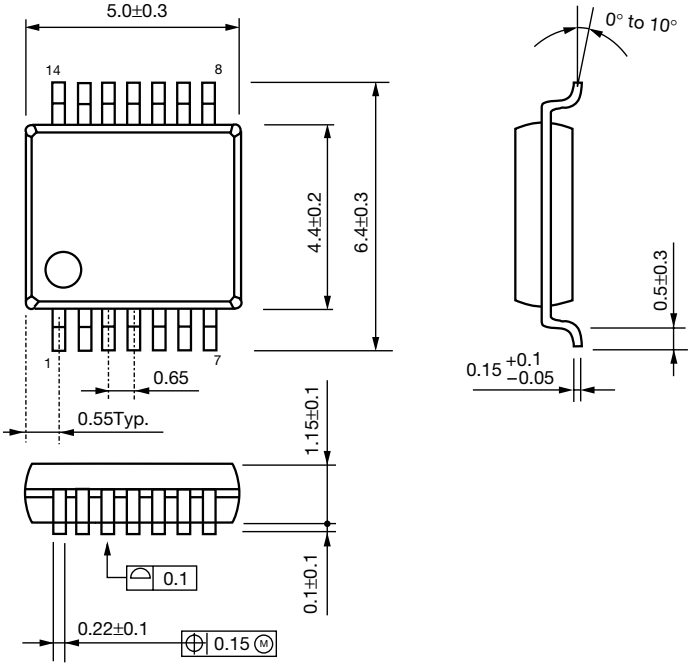

TAPING SPECIFICATION

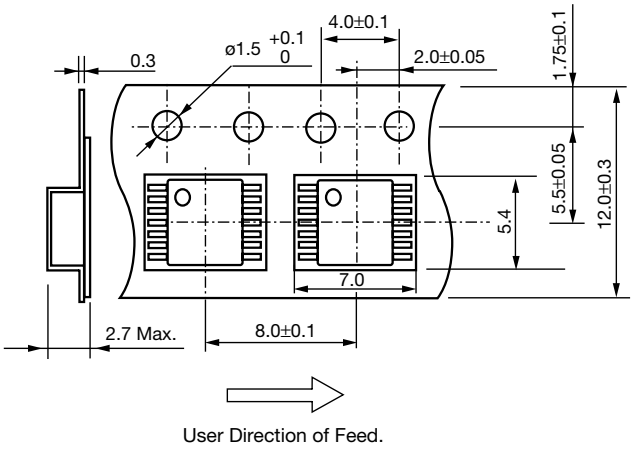

TAPING REEL DIMENSIONS
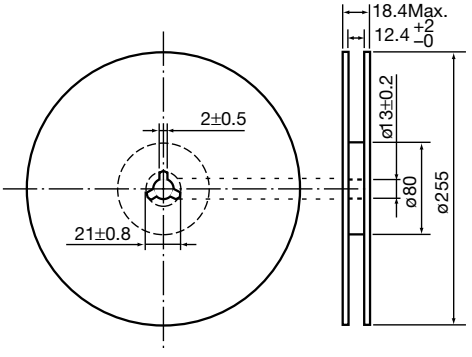
(1reel=2000pcs)