- **WLCSP-4-P4**

Unit: mm

PACKAGE DIMENSIONS

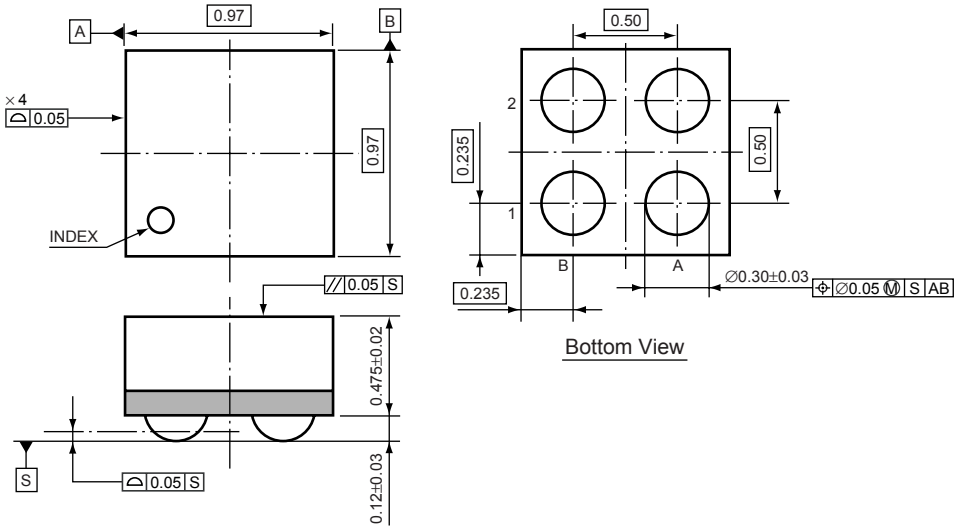

TAPING SPECIFICATION

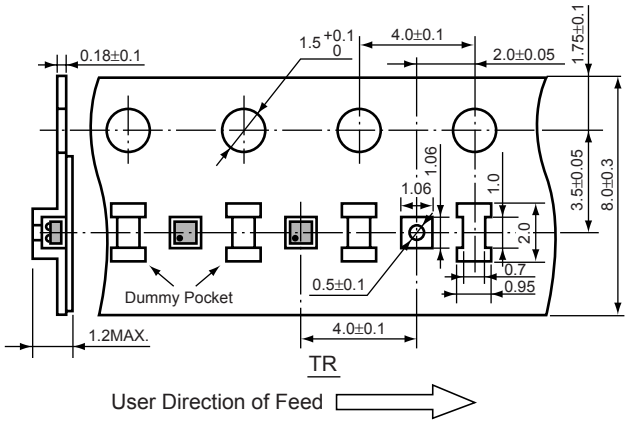

TAPING REEL DIMENSIONS
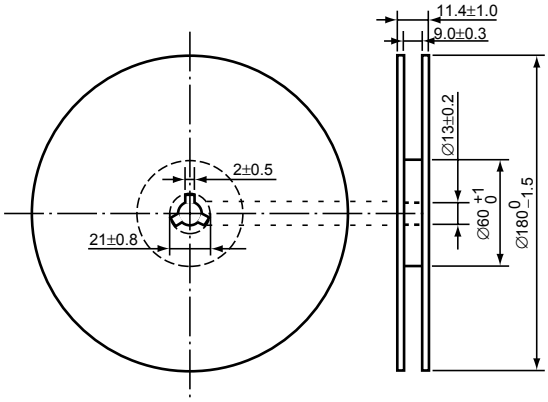
(1reel=3000pcs)